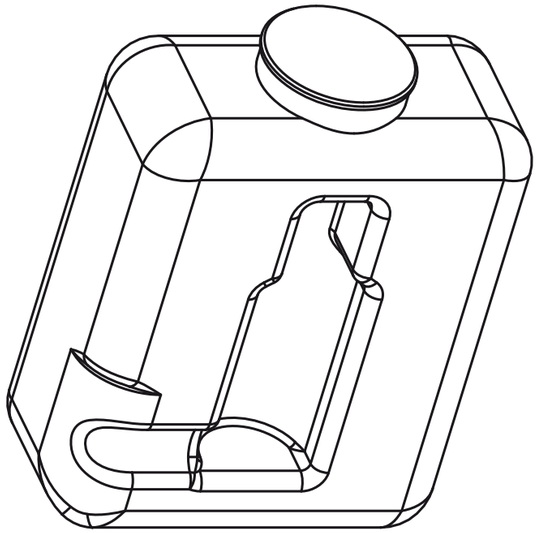

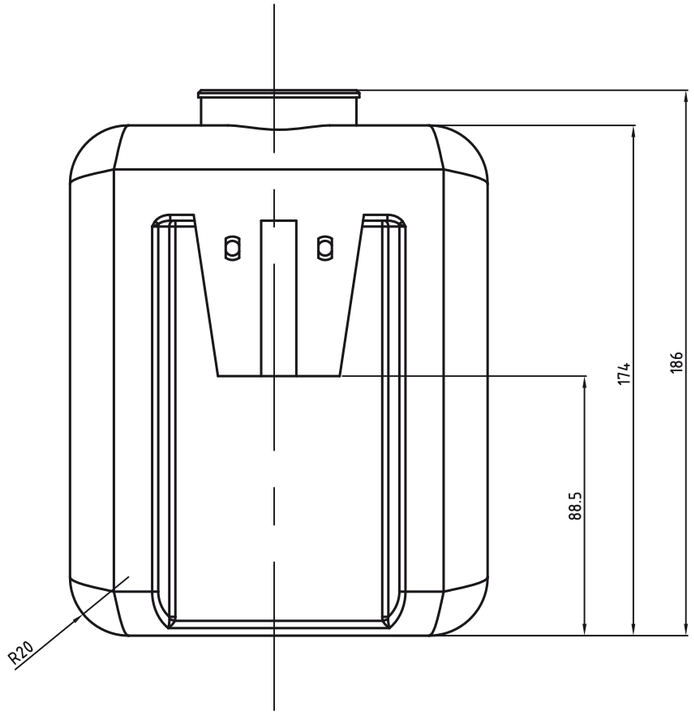

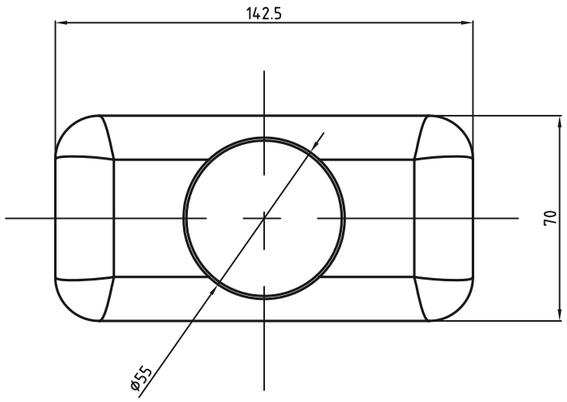

						03-026 BOTTLE		
								MATERIAL HPDE
						A	1:2	